Carl Friedrich Tenner – founder of Russian geodesy

Tõnu Viik - Tartu Observatory, e-mail: viik@aai.ee

1. Introduction

Carl Friedrich Tenner (1783 – 1859) may most surely be named the founder of geodesy in Russia. Under his supervision the first accurate topographic and geodetic works were done, a whole generation of young military geodesists was educated, triangulation was divided into classes according to their accuracy and the principle of moving from particular to general was introduced.

The great Russian-Scandinavian arc measurement which now bears the name of Struve (it is included under this name into World Heritage List [1]) should bear the name of Struve and Tenner, since the major part of this measurement was done under Tenner's supervision and by his proposal.

The obituary published in the proceedings of Depot of the Russian Military Topography says: ”The Depot lost one of its enthusiastic and persistent colleagues in the field of state geodesy. This veteran in geodesy was general of infantry Karl Ivanovitsh Tenner (such was his name in Russia – author), who among the first started to properly carry out geodetic works in Russia in 1816 and who with perpetual diligence continued them during his activities in almost fifty years. This brought him all-European fame and this was recognized by many foreign academies and scientific societies who elected him their member” [2]

There are quite a few papers published in Estonia about Tenner [4-10], the most exhaustive of them is evidently that of by A. Vuuk [9] but the author of the present article thinks that this is by far not enough and there are many aspects of his life still not examined.

We have to highly estimate this great man who came from among ourselves and whose part in Russian geodesy and especially in the measurements of Struve's arc cannot be overestimated.

This article is mostly based on the obituary in [2] and the booklet by Z. Novokshanova about Tenner [3].

Carl Friedrich Tenner

2. Overview of the topographic and geodetic activities in Russia in the XVIII – XIX centuries

The territory of Russia has been geographically explored even before tsar Peter the Great. But the development of economy, like e.g. the arising of the all-Russian market, required topographical data for large areas. At the final years of Peter the Great the large scale mapping of the internal regions of Russia was initiated. This work was done according to the General Regulation where the special requirements for the mapping were given.

The sad experiences of the Seven-year war (1756-1762) forced to pay attention to the military topography in the army and when the military headquarters was founded in Russia in 1763, then its tasks included also the performing of topographic and cartographic works and training officers in the quartermaster department of the military headquarters. Frequent wars, the growing armies and its activities – all that required the enlargement and improvement of the military topography. In the 90ties of the 18th century one started to pay more attention to mapping. This work has been going on in the Crimea but for the areas between the rivers Bug and Dnestr there were no maps. The mapping of the so-called Ochakov steppes was started, also the mapping of Belarus, Lithuania and Finland.

At the same time the general marking of the boundaries was started and this work could not be done without the officers of the quartermaster department of the military headquarters. By that time these officers were quite skilled in their work. At the end of the 18th century a bulk of materials were gathered for large areas in Russia but this data was not attached to astronomical-geodetic coordinates. Besides of that this material was only for departmental use.

In 1797 a separate division was created in the quartermaster department in the military headquarters – the Map Depot which was planned to be an archive of different maps and plans and to compile them together with explanations. This was not meant to be a military organization. But soon the requirement of censorship was issued together with the interdict to take maps outside of Russia!

The work has started and the Map Depot published the general map of Russia with postal roads and with other important roads, detailed military maps of the border areas with Prussia and Turkey in the scale of 1 : 42 000, and in 1805 the map of Russia in the scale of 1 : 84 000.

With the formation of the Map Depot the influence of the geographical department of the Russian Academy of Sciences where the maps were previously compiled, decreased and in 1799 the geographical department was liquidated entirely.

Towards the end of the XVIII century and the beginning of the XIX century the old armies with less manoeuvrebility were replaced by much bigger and much more manoeuverable armies and this required precise maps since otherwise it was impossible to command them.

In 1812 the Map Depot was renamed the Depot of Military Topography. This brought along both the bigger number of employees and bigger authority. The superiors wanted to hire educated and talented young officers who had to train good mappers because they were

much in demand. One of the most important officers was Johann von Witzthum, later a major-general, who taught geometry, technical drawing and mapping.

The major deficiency of the maps of that time was their poor accuracy which was caused by the small number of astronomical reference marks. For instance in 1790 there were only 57 reference marks for all of Russia. At least partly the lack of astronomical reference points was caused by the fact that for determining the astronomical coordinates one has to take along very big instruments, for instance a 5 to 7 m long chromatic telescope. Only since 1804 academician Fyodor Schubert started to use sextant, small achromatic telescope and chronometer. The increase in determining the accuracy of geographical coordinates was helped by the general development of science and technique.

Jan Peter van Suchtelen

Jan Peter van Suchtelen, a very educated man of Dutch origin, became the head of the Quartermaster department [11]. He had been the head of the Map Depot since 1802. Suchtelen paid a special attention to to astronomical training of officers and this work was

entrusted to academician F. Schubert [12].
Although at that time it was clear that the Earth is oblate at the poles, a question remained: what is the exact shape of the Earth and how big is its oblateness.
In Russia the authorities wanted to answer this question by measuring a meridian arc near St Petersburg and the first astronomer of the St Petersburg Academy Frenchman Joseph-Nicholas Delisle (not to be mixed up with Claude-Joseph Rouget de Lisle, the author of Marseillaise), who was invited to Russia by Peter the Great in 1725, was engaged to perform this task [13]. He took on a very ambitious task – to measure the meridian arc through St Petersburg along 22-23 degrees. Tsarina Anna regarded this plan with contentment and de Lisle started his work by measuring a baseline on the ice of the Gulf of Finland with wooden rods from village Dubni on Retusaari island to Peterhof in 1737 which makes 13.5 versts or 14.4 km. In 1739 this baseline was joined with some close-by points by triangles but this was the end of it. As one of the causes of such an abrupt end of these works the journey of de Lisle to Siberia in 1740 to 1741 was mentioned.
We may note another failed attempt to measure Russia. It was in 1814 when the director of the Seeberg Observatory Bernhard August von Lindenau offered his services to Prince Volkonski for measuring a long arc in Russia, from the White sea towards south. But it so happened that the Prince and the director could not agree upon a simple question – the instruments of which country to use. And this attempt failed as well!
This was the roughly put situation in topography and geodesy in Russia at the time when young Tenner happened to start his career.

3. Childhood and origin

Carl Friedrich Tenner was born on July 22nd, 1783 (old style) in nowadays county East-Virumaa, in Vaivara parish in the family of the manager of Auvere manor as the second child of the family of ten [4].
A long time Tenner was thought to be a Baltic-German. In 1983 the Estonian historian August Traat expressed a cautious opinion that Tenner might have been an Estonian. In his opinion he relied mainly on a work by Baltic-German doctor and writer G.J. Schultz-Bertram “Wagien” [13], where the author asserted that Lieutenant-General Tenner was of Estonian origin [5]. But only the study by Lemming Rootsmäe, based on archive materials, proved this statement convincingly [4].

Tenner's father Johann has worked at Alatskivi settlement in 1771 to 1773 as a servant of Paul Magnus von Bock and after that as a Kodavere parish clerk and at the same time as a teacher in Kodavere settlement. He married Elisabeth Kulmbach from Saare manor on April 2nd, 1774. It is highly probable that she was an Estonian, too, though the data in Maarja-Magdaleena metrics book is absent for the necessary time period [3]. We cannot be totally certain but we may guess that the Tenner family left Kodassaare for Auvere in 1781. The life in Alutaguse area, amidst the forests and bogs was and remained miserable and the family moved to the Saare manor (Sarenhof) in 1785. The owner of this manor was state councillor Colonel Magnus Johann von Bock and Tenner's father was again engaged as a manager there. Most probably the family remained there until the death of M.J. von Bock in 1807.

Tenner's parents were not able to give their children systematic education thus they hired sometimes the travelling teachers. But the life of little Carl changed drastically when in the nineties of the XVIII century the landlord invited two surveyors to Saare manor or as they were called at that time – inspectors, Sengbusch and Lemm, to measure his real estate.

The Saare manor

Little Carl followed the work of these men very attentively, especially the field-work, and

how they later put the maps together. This went not unnoticed and the surveyors acquainted the boy with technical drawing and some methods of topography. Carl understood quickly the explanations and he could soon draw some simple maps. At the same time he started to copy the paintings and engravings in the manor [6]. One of the surveyors - Lemm – was a good violinist and he started to teach violin to Johann. He was a quick learner and they both started to offer masterful musical entertainment to manor people. The son-in-law of the landlord, the landlord of Rõngu manor Count Gotthard Andreas von Manteuffel who was a well-educated man and who became senator later, noticed the drawings of this talented boy while visiting Saare manor. He immediately understood Johann's intelligence and he asked Johann's father to give the boy under his tutoring in Rõngu manor. So it happened that Tenner spent more than five years in Rõngu manor while during the last years he was the manor clerk. He studied German, French and Latin languages, to say nothing about mathematics and other general subjects.

The Rõngu manor

4. In St Petersburg

Approximately at the same time Count Manteuffel was about to finish the writing of his book on Siberia and on the commercial relations of Russia with the Central Asian countries. Tenner drew the map in ten sheets which were necessary to illustrate the book. When it was required to obtain additional material, Count travelled to St Petersburg and

took Tenner with him. The materials were obtained from the Map Depot of the Quartermaster department of the military headquarters where the Count's good acquaintance General Suchtelen was the boss. History says that on the advice of the Count general proposed to Tenner to come to work in the Quartermaster department. Tenner accepted gladly this proposal. He spent the winter at his parents' place and in spring of 1802 he began his travel to St Petersburg, having in his pockets 100 roubles, presented to him by the Count and a small sum given him by his parents and relatives.

So began Tenner's studies of topography in the Mikhail palace where the Map Depot was then situated. At first he had to learn the Russian language in order to be able to read the books on geodesy, written in Russian. Everything progressed smoothly and after graduating from the courses Tenner was promoted an officer. He worked under Suchtelen, executing different topographic tasks. It was extremely important that Suchtelen let him to use his library which was very big already at that time.

Since the importance of this man in Tenner's becoming a world-famous geodesist we describe his life shortly here. Dutchman Jan-Peter van Suchtelen (1751 – 1836) has started his career in Russia as an engineer-colonel in 1783. He was in charge of different hydrotechnical works in St Petersburg, Tallinn and elsewhere in Russia. He stood out in Russian-Swedish wars and he was the man because of who Suomenlinna (Sveaborg castle) was captured by the Russians. After signing the peace treaty Suchtelen was sent to Stockholm as an ambassador whose task was to create a union between Russia and Sweden against France. He succeeded brilliantly in this. He kept low profile but gave parties for important people in Sweden and gained their loyalty because of his intelligence and good manners.

Suchtelen was well known for his interest in printed matters, especially in rare books. While living in Stockholm he collected a huge library and when after his death it was transported to Russia then General Fyodor F. Shubert (the son of the academician) [15,16] informed in his report that the library of Suchtelen consisted of 70 000 volumes, not speaking about manuscripts and maps!

By the recommendation of Suchtelen Tenner started to learn astronomy, too, read by academician Schubert but he could not finish the course since the fate wanted otherwise.

5. The dispatch to China, campaigns and the beginning of geodetic measurements

In 1805 the tsarist government decided to send a diplomatic delegation to China under the leadership of Count Juri Aleksandrovitsh Golovkin. As it was common at that time the delegation consisted also of scientists and specialists who had to investigate everything during their voyage to China through Tobolsk, Irkutsk, Kjahta and further on through the Gobi desert. This “everything” meant also drawing maps. Before the dispatch Tenner was given the task to prepare a map of this voyage together with the description of the places to be gone through. Though there were almost no data for drawing such a detailed map Tenner was up the expectations and the map was ready at the given time. Evidently one of the reasons of his success was the fact that he had compiled the map of Siberia for Count Manteuffel. This same was evidently also the reason why he was nominated a member of the geography group under academician Shubert in the delegation.

When the delegation reached Irkutsk they rested for a month and only then they continued their journey. During all the journey the geography group drew maps by eye only, using the scale 1:84000. The capital of Chinese Mongolia Urgaa (now Ulaan Baator) was the final point of their journey since Count Golovkin refused to bow before the statue of the Emperor of China. This procedure was compulsory for every foreigner.

On the way back Tenner together with two other officers was sent from Kjahta to Nertshinsk area to map these regions by eye, up to Amur river. When they returned from this trip to Irkutsk they were sent once more to map the regions from Kolõvan through Barnaul up to Ust-Buhtarma stronghold. The group of Tenner returned to St Petersburg only in January 1807. Count Golovkin characterized the work done under leadership of Tenner as brilliant.

All the year of 1807 Tenner spent in different campaigns against Napoleon in a guard division, taking part in battles of Gutstadt, Heidelberg and Friedland. All these battles were lost to Napoleon and after signing the Tilsit peace treaty the fourth coalition against Napoleon found an end.

Tenner returned to the Map Depot in St Petersburg where he started to work on the maps compiled during the trip to Siberia and the respective atlas was published in 1809. At the same time he renewed attending the astronomical lectures by Shubert. After that his official education was concluded.

In 1809 Tenner together with two other officers was given a task to map the area of St Petersburg and then the regions close to the southern coast of the Gulf of Finland and the islands in it. They started by measuring a baseline on Vassili island in St Petersburg using the Ramsden chain made of iron [19]. The angles were measured by the fifteen-inch Troughton repeating theodolite and the six-inch Ramsden theodolite. This St Petersburg triangulation was the first Russian triangulation which had a real practical value. The work continued to Narva in 1810 and to Tallinn and Tartu in spring of 1811. They built signals and measured one more baseline on Kotlin island. They also compiled a map of coastal triangles. Like all the Tenner's later geodetic works this one was highly accurate, too.
In 1812 the Patriotic war began, in which Tenner took part, campaigning in battles of Vitebsk, Smolensk and Borodino. He was given three orders for chivalry – one them was the Cross of St George of the 4th degree. This order was given only for personal valour. Tenner received also a golden sword with the inscript "For bravery" (it shoud be said here that Tenner received also the Prussian order "Pour le Mérite" on May 18th, 1858 [17]). Tenner took part in battles of Tarutino, Vjazma and Krasnõi and in 1813 in battles of Leipzig and Hamburg being a deputy of the head quartermaster of a corps.

6. Trigonometric ja topographic measurements in Vilnius province

In 1810 Prince Pjotr Mihhailovitsh Volkonski was named the quartermaster-general and later the Head of the General Headquarters and the Depot of Military topography [18]. He fully shared the standpoint of Suchtelen that the topographic works in Russia should be

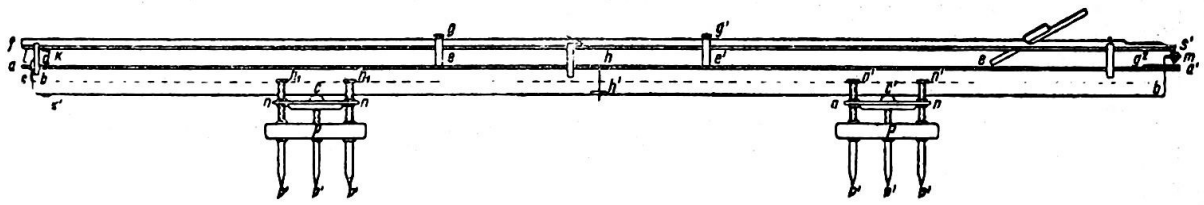

Tenner's measuring rod

done more accurately and they should be based on scientific research. In December 16th, 1815 he ordered the performance of the trigonometric and topographic measurements in Vilnius (Vilno) government. The direction of this task was given to Tenner who planned this

work much more general than just a compilation of topographic maps. From the very beginning he planned to measure a meridian arc. Tenner together with two other officers began this work with looking for a place to measure at least a 10 km baseline either on the ice of Braslava or Drisvjata lakes. The winter happened to be very cold and snowy, wind piled up giant snowdrifts but this was no match for the young officers. After a long wading in snowdrifts they chose the Drisvjata lake. According to Tenner's project they planned to build two rows of first-class triangles, one through Vilnius and Kaunas (Kovno) and the other through Shiauliai (Shavli) up to Palanga (Polangen). The areas between these triangles were planned to be filled in with second and third class triangles. In one corner of a first class triangle they planned to measure its geographical coordinates astronomically, for what an observatory was built in Meshkonys (Meshkantsy).

The triangulation in Vilnius government was one of the biggest trigonometric works, which consisted of Drisvjata, Ponedelski and Palanga baselines, of 11 closed polygons, consisting of 119 triangles (part of them was compiled in 1832 when this net was joined with Prussian net) and of 100 reference points. These consisted of 71 signals (from 10 to 30 meters high), of 21 pyramids (from 4 to 8 meters high) and of 8 towers.

In Meshkonys Tenner measured its geographical coordinates in 1818, using the Polar star and Altair for determining the zenith angles in meridian. This point was so well chosen that it was later used to map the Kurland and Grodno governments. In his works Tenner used the methods of French scientists Jean Baptiste Joseph Delambre, Adrien-Marie Legendre and Pierre François André Méchain, only slightly trimming these methods to Russian circumstances.

To determine the geographical latitude of a point at that time one needed a good barometer. Since Tenner did not have one he found an original method to determine the atmospheric pressure using the interpolation of the readings of not so accurate barometers.

How did the Tenner's measuring rod look like? At first he planned to use the 10-sazhen Ramsden chain. As Tenner had used it before he argued against it – it was impossible to measure the temperature of the whole chain accurately enough because the different regions of the chain could have very different temperatures. Taking into account these arguments Volkonski ordered a new instrument from the mechanical shop of the Military Headquarters which was made after the Delambre's instrument but which was improved by Tenner.

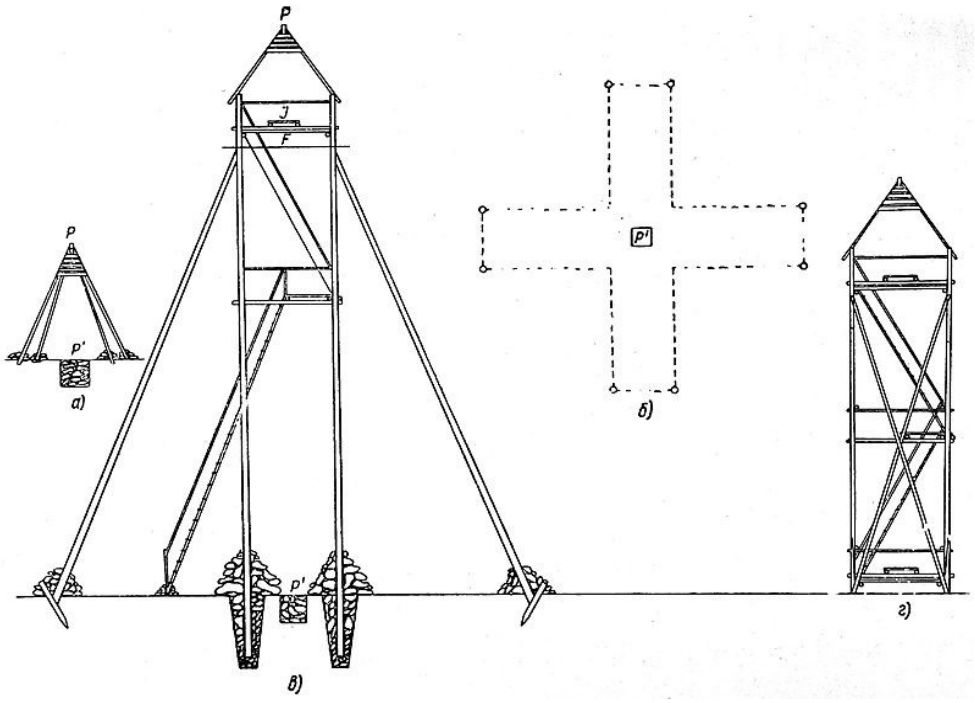

The signals by Tenner

This instrument remained in use for 30 years. It consisted of four iron rods each 13 feet 11.94 inches long (426.57 cm), 0.85 inches (2.16 cm) wide and 0.3 inches (0.76 cm) thick. Each rod lied freely on a base of redwood and was fixed to the base at one point. Later Tenner changed the redwood base by a base made of pine because the redwood tended to bend. For measuring the distance between the two rods along the baseline Tenner used 4 inches long silver-covered brass pins which protruded from the rods. These pins had a scale of accuracy of one hundreth of an inch, and also a nonius which helped to read the distances with accuracy of one thousandth of an inch provided you were using a magnifying class (8 times). To arrange the rods in the direction of baseline Tenner used a theodolite. In order to measure horisontal declination they used a level, the accuracy of which was checked during each measurement.

One of the important improvement Tenner started to use was the quicksilver thermometers with Réaumur scale. Before that everybody used metal thermometers. The thermal expansion of the rods was measured with a pyrometric device which was made in the mechanical shop of the military headquarters in 1818.

Differently of Struve Tenner paid very much attention to marking the ends of baselines on terrain. For this a hole about two cubic meters was dug which was filled in with stones and

lime. A granite cube with the side of 25 cm was placed in the hole. In the cube there was a a cylinder shaped hollow filled in with lead. The center of the cylinder was the initial or the final point, respectively.

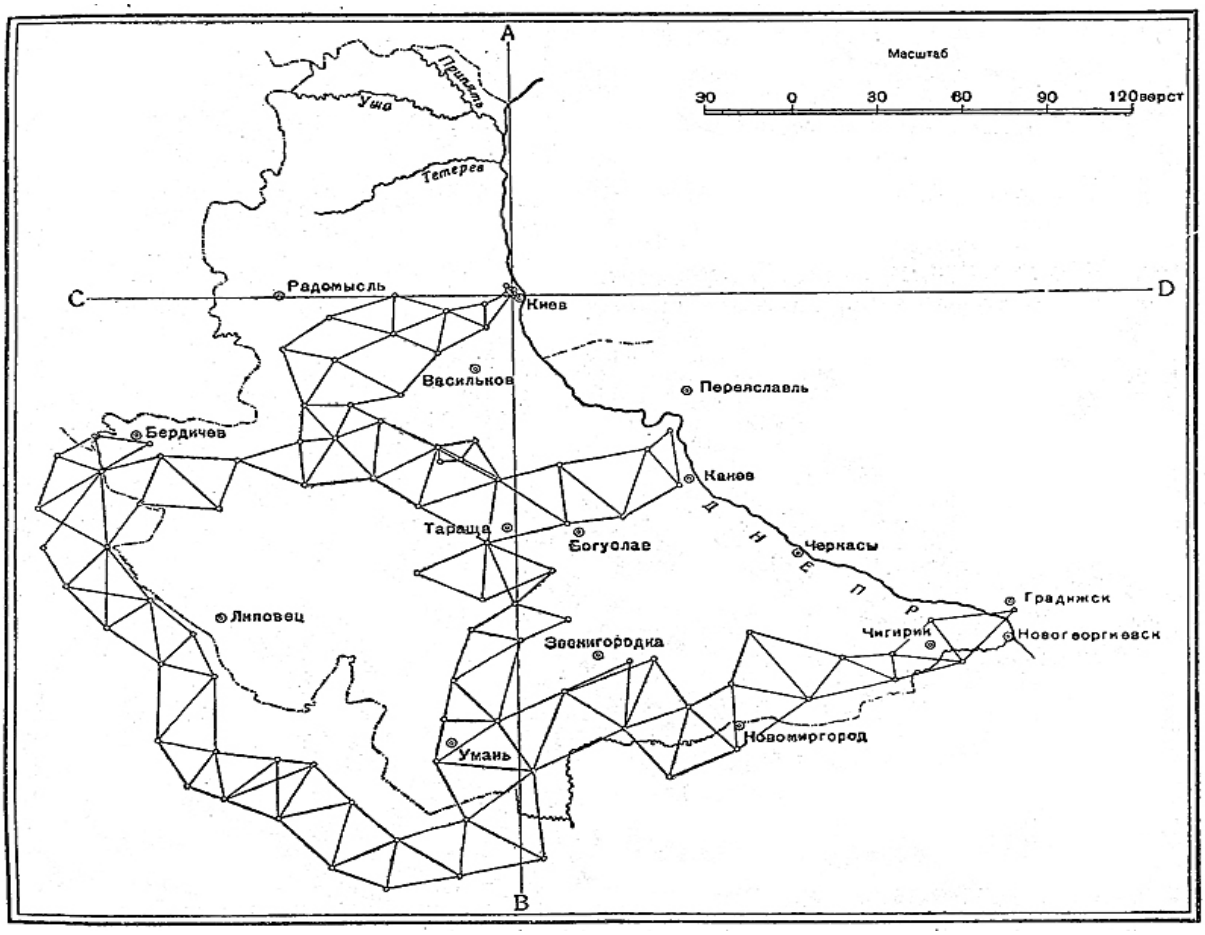

The Ukrainian triangulation

During the measurements Tenner dealt with the most important tasks, like the placement of the first measuring rod. The rods were put on the bearers which were at the height of only 30 cm from the ground. Tenner thought that this would give better stability to the rods but at the same time it made the measurement much harder because one had to kneel to get the reading. So it was possible to cover only about 700 meters per day.

When Tenner measured the baseline of Ossovnitsa in 1827 he started to use special shields for hiding the rods from the sun. This helped to make the period of measurements much longer because in sunny days without these shields one could measure only early in

the morning and late in the afternoon.

Together with the measurement tools the Goldbach normal sazhen and the Ramsden callipers were sent to Vilnius expedition. Later the pyrometric device, the passage instrument on three legs, two theodolites and 18-inch Ertel vertical circle were added.

All the length measurements Tenner made with his instrument, the length of which was compared with the so called normal measure which was the normal sazhen No 1 sent to Tenner from the mechanical shop of the Military Headquarters in 1816. This sazhen was made by mechanic Yuryev from Moscow under the leadership of professor of astronomy Goldbach who determined the length of sazhen using the toise of Lenoir which was 6 Paris feet long (the Russian sazhen was 7 London feet long). This comparison length was in use until 1822 when Tenner carried it over to normal sazhen No 10, using the Ramsden callipers.

Since the length of the normal sazhen No 1 was measured at the temperature 14 R (17.5 C) then forthwith Tenner tried to compare lengths at the same temperature. In 1823 he compared the lengths of sazhen and Lennel's French toise at the same temperature and found that one toise is 76.735276 inches or 0.9135152 sazhens.

As already pointed out, Tenner paid very big attention to securing the endpoints of baselines and to strong construction of signals, wherefore when in turn of XIX – XX centuries K.V. Scharnhorst from the Department of Military topography had calculated anew all the geodetical measurements done in Russia he had to notice that one could trust only Tenner's measurements. Tenner's work has been used in new triangulations in 1910 – 1916 and also during the Soviet power.

Tenner contributed hugely to the development of Russian topography, especially when we keep in mind the accuracy of his work. As a good example of Tenner's work we may bring the maps of Vilnius government which were done in scale of 1:21000 (half inch to one verst).

7. The measurements in Kurland, Grodno and Minsk governments

When the work in Vilnius government was finished the same kind of work was commenced in Kurland and after that in Grodno and Minsk provinces. These works were done according to Tenner's plan who recommended to continue from Vilnius government with three rows of the first class triangles which should be filled in with second and third class triangles. Calculating the first row from Palanga baseline and the other from Ponedelski

baseline would have shown what accuracy had been obtained. Tenner concluded that the absolute error was 0.139 sazhens and the relative - 1:73000, so there was no need to measure another baseline for checking purposes.

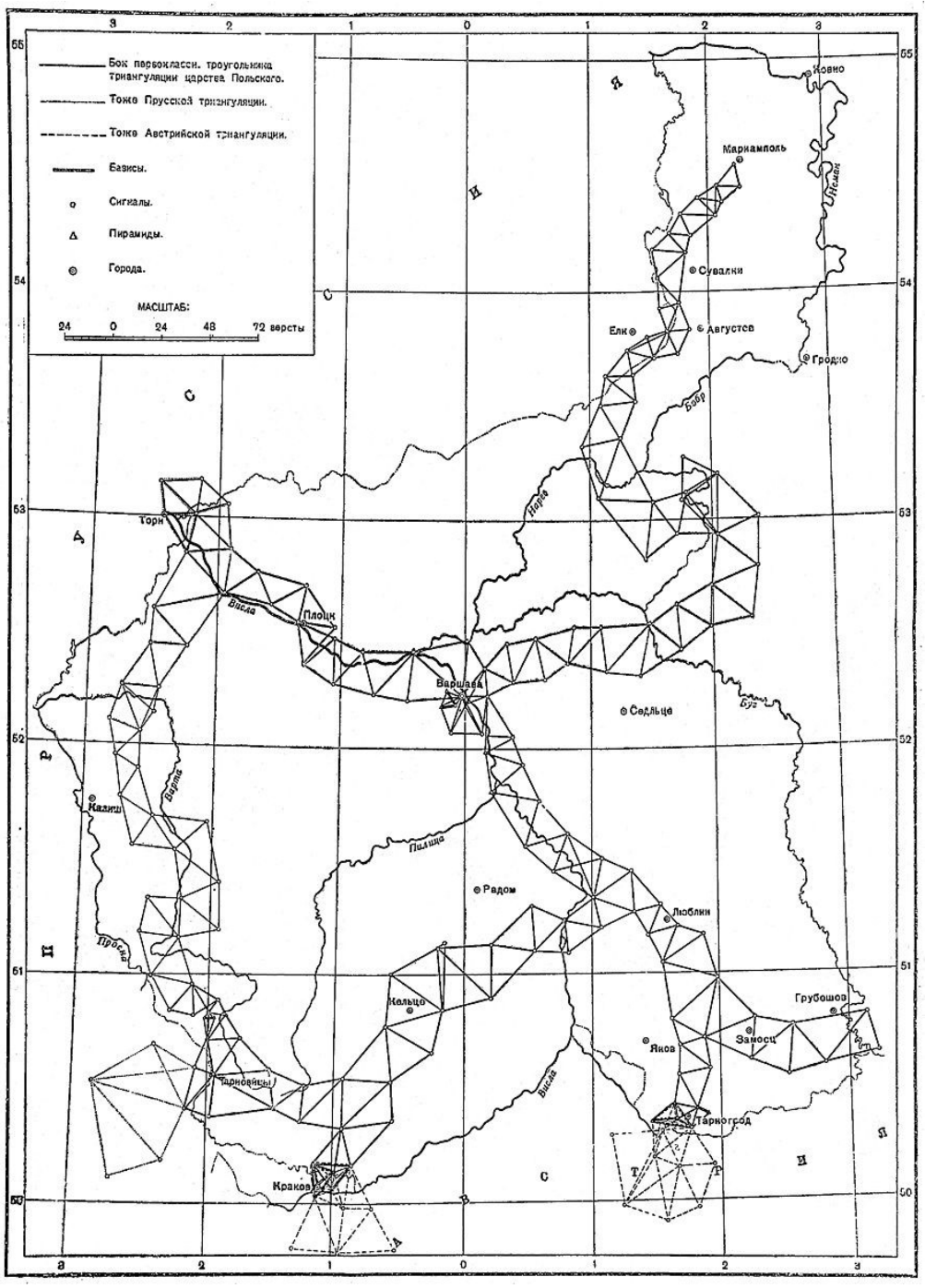

The triangulation in Poland

In 1824 Tenner introduced universal instruments, vertical circles and astronomical theodolites instead of earlier used repeating theodolites. Four years later Tenner introduced yet another new element – he started to use for measuring angles a method used by Struve – the method of measuring the angles in sets.

Already before the work in Kurland was finished Tenner presented a plan to measure Grodno government to the Committee of military sciences who approved it at once. The beginning of the work was a little late since nobody wanted to begin it without Tenner who was on four month long recreation in Karlsbad. By the way, during this trip he got acquainted with Professor of astronomy and mathematics in Königsberg university Friedrich Wilhelm Bessel and with the famous producer of scientific instruments in München Georg von Reichenbach.

All the Grodno net consisted of 34 first class triangles and it was calculated on the Ossovnitsa baseline measured in 1827. The measurements in Minsk government were based on that baseline, too. In Minsk government Tenner met with big problems since there were many almost impenetrable bogs. This means that they had to build high signals. Evidently due to these hardships the probable closing error was 0”.734 in Minsk government, in Vilnius this error was only 0”.616 and in Grodno 0”.395.

8. The measurements in Ukraine, in the Kingdom of Poland and in Bessarabia

These measurements started in 1836. The row of first class triangles in Volynia began from Grodno net and this was continued with two rows of first class trangles in Podolia government and these rows were joined with the relative error of 1:250000 in southern part of Podolia.

Here Tenner had to return to the repeater method since the theodolite of the Military Headquarters gave then more accurate results than measuring the angles in sets. The benchmark points of both governments were calculated on the basis of the elements of Walbeck spheroid.

In 1839 the two first governments were measured ja next year the measurements started in Kiev government. The baseline was measured near Belaja Tserkov. In order to get better accuracy Tenner added one more thermometer to the rods.

In 1843 Tenner built a net of the first class triangles also in Byałystok (Belostok) region.

And in 1845 Tenner started the measurements in Kingdom of Poland. At first Tenner drew

up the project and then put together the budget, it was approved in the end of 1844. Next spring Tenner started the field work. Three baselines were measured, one of them near Warsaw was the main baseline, the other two were near Tarnogród (Tarnograd) at the border with Galicia and near Częstochowa at the border with Silesien. The basic point for the coordinates was Warsaw observatory. The triangulation in Poland was Tenner's best work and during this work Tenner wrote the detailed instruction for carrying out triangulation.

The importance of the triangulation of Poland is stressed by the fact that this was used to join the Russian triangulation network with that of the Western Europe through Prussia and Austria.

In the thirties of the XIX century the Head of the Prussian Military Headquarters wrote to the Quartermaster-General of the Russian Military Headquarters the proposition to join the triangulation net in Eastern Prussia with the net measured by Tenner in Vilnius government (according to another data the situation was vice versa – the Russians proposed it to Prussians) [20]). Tenner went thoroughly through this proposition, drew up the budget and the project and he recommended to use two first class triangles at Klaipeda (Memel) . On October 12th, 1832 Bessel and Tenner signed the agreement. As soon as it was authorized Tenner started his work and it was finished in March 1833. Tenner received the results from his Prussian colleagues only in December 24th, 1836. One of the reasons for being this late was evidently the outbreak of cholera in Prussia. After having compared the results Tenner announced that the work was done as well as possible since the probable closing error was only 0".205. The results were brilliant despite of the fact that both parties used different instruments.

It was not so simple with Austria. Their military geodesists worked very accurately as a rule but there was no accurate triangulation net in Galicia. The Austrian geodesists had to remeasure their net in Galicia. In 1847 Tenner and the head of Austrian triangulation Marienni signed an agreement to join the nets at Tarnograd and Krakov. All the joining work was done in 1848-1851.

One of the causes of the very good accuracy was the fact that the joint points of neighbour triangles were marked with stone pillars. Also the influence of refraction was carefully taken into account and the angles were measured by measuring the angles in sets. During the Austrian triangulation the trigonometric levelling was carried out, too, and the respective net was joined by the level of the Adriatic sea. In this way the difference between the levels of Baltic and Adriatic sea was determined but the result was not very

accurate.

In parallel to works in Poland Tenner took on the measurements in Bessarabia in 1846. This rested on two baselines, one at Romankovtsy (Romankautsi), which was measured in autumn of 1848 and another at Izmail which was measured in spring of 1849. Here Tenner used a new method – he divided the measurement's errors among all the neighbouring triangles. In doing that the plus and minus errors were divided in such a way that the sum of the inner angles of triangles did not change.

Together with finishing the Bessarabia triangulation it became possible to determine the difference between the levels of the Baltic and the Black sea. When Tenner had measured the Palanga baseline he had measured also the height of the Palanga point above the sea level. When the triangulation net of 157 triangles reached the Black sea at Voltshji kordon he measured the height of the sea level there. Tenner found that the level of the Baltic sea was 1.13 m higher than the respective level of the Black sea (nowadays this distance is measured to be only 0.4 m).

9. The arc measurement by Struve and Tenner

The participation of Tenner in the great Russian-Scandinavian meridian measurement is worth of serious attention because with this measurement the shape of the Earth and its dimensions were specified more precisely. Incidentally this made Tenner's name famous all over the world. Struve wrote that both men came up with the idea of measuring such an arc at the same time because they were already making this kind of measurements.

Already in 1816 when Tenner was on the reconnaissance of Vilnius government he made a proposition to the Head of Military headquarters Prince Volkonski to measure the meridian arc through Vilnius observatory. Volkonski who always had supported scientific initiative agreed upon that so Tenner always had in mind the way how to use his first class triangles for that purpose.

The situation became worse when Prince Volkonski left the post. Tenner could not count on the help of the Head of the Depot of Military topography F.F. Shubert who was of the opinion that the triangulation had only military dimension. In order to continue the arc measurement Tenner had to debit the finances allocated to topographic triangulation. At last Tenner wrote a letter to the Head of the Military Headquarters Hans Karl Friedrich Anton von Diebitsch and Narden (in Russian Diebitsch-Zabalkanski) in which he explained that knowing the exact shape of the Earth was very important for drawing up the

topographic maps and asked for permission to carry on with the respective measurements [21]. Having got the permission Tenner started the astronomical observations for measuring the Lithuanian part of the arc. At one of the endpoints of the arc which was situated in Bristen – approximately 30 km from Jekabpils (Jacobstadt) Tenner observed in 1826 and in Belin, where a new observatory was built, in 1827. In November 1827 Tenner who closely followed all the geodetic works in Russia and abroad came forward with an idea to join the Lithuanian arc with that of Livland which was measured by Friedrich Georg

The Arc of Struve and Tenner

Wilhelm Struve on the appointment of Tartu University.

He was given the permission and in January 1828 Tenner came to Tartu to meet Struve. The negotiations were successful and on February 23rd the protocol was signed for joining the arc measurements. In this protocol the respective commitments of both men were determined. Tenner had to trigonometrically join the southernmost point of Struve with the northernmost point of his net. Struve had to provide the joining of both nets astronomically. Struve promised to find the relation between the units of lengths of both measurements, i.e. compare the Lennel toise which had been used by Struve with the Jean Nicolas Fortin toise – Tenner had already compared his sazhen No 10 with the Fortin toise [22]. To be quite sure in the results they did not inform each other of the results but sent the data to the Head of the Depot of Military topography F.F. Shubert and to Professor of astronomy in Königsberg university F.W. Bessel. They made the final comparison and agreed upon the very good accordance of the results and the brilliant accuracy of the measurements.

In January 1832 both the great men met again in Tartu. They discussed about the too big a difference between Struve's observed azimuth in direction Krustpils (Kreutzburg) – Taborskalns (Daborskaln) and Tenner's calculations which reached 26”.01. Struve thought that this error was caused by the fact that Tenner used inaccurate instruments. Tenner decided to repeat the observations in Vilnius observatory with its good instruments but the difference persisted. Struve and Tenner agreed that there should be local influence on the determining of the vertical direction.

The importance of the Lithuania – Livland arc measurement was appraised so highly that the St Petersburg academy of sciences elected Tenner its honorary member on December 22nd, 1832.

In 1834 Tenner recommended Bessel to calculate the dimensions of the Earth and its oblateness. Bessel did it and took into account all the results of the arc measurements known at that time. These elements of the spheroid found by Bessel were in use close to 100 years! According to Bessel the big half-axis of the Earth was a = 6 377 096 m, the small half-axis b = 6 356 015 m and the polar oblateness α = 1 : 302.5 [23].

When General Field Marshal Friedrich Wilhelm Rembert Count von Berg was named the Quartermaster General in 1844 then Tenner's arc measurement became much more easier because it became official.

In 1844 Struve and Tenner decided to continue the arc measurements up to the estuary of Danube in such a way making it longer by 3 degrees and 25 minutes.

All the huge undertaking – the arc measurement from Fuglenes in Norway to Staro-Nekrassovka in Ukraine – altogether 25 degrees and 25 minutes or 2880 km – ended in 1850. The part of Tenner in it was 11 degrees 10 minutes and the Struve's part - 9 degrees 38 minutes.

This means that we are not making a mistake when suggesting to name this arc measurement Struve-Tenner arc measurement. As we have already mentioned here Tenner scores for having marked the centres of his signal points in a lasting way while Struve did not do it.

10. The role of Tenner in training of Russian geodesists and topographers

When Tenner was charged with the measurements in Vilnius government in 1818 he was confronted by a big problem since he had no experts – only five from the body of 25 officers knew something about the geodetic measurements. Naturally enough Tenner started from training of his team but this work was inhibited by the circumstances that each year he had to send five trained officers to the Military headquarters and they were replaced by five untrained ones.

Such a situation needed a permanent solution and Tenner proposed to train the so-called cantonists – orphans of military personnel – for performing geodetic work. Since Russia carried on warfare against its neighbours practically all the time the number of orphans was very big. When he received the green light he chose from the nearest – department of Riga - 15 boys and trained them thoroughly. Since this project was successful then next year he trained already 55 cantonists so that in 1821 he had many specialists who knew their profession well enough to perform self-sufficient measurements. From that number many geodesists arose who were well known to the geodetic world like I.I. Hodzko, M.P. Vrontšenko (who was educated in Tartu University) etc.

This idea of Tenner was used by F.F. Shubert in composing the ordinance of military topographers.

In 1826 Tenner reported to the Committee of Military Sciences the memoirs of carrying through big imperial mappings where he suggested to take into use the scale of two versts to an inch or 1 : 84 000 because of the huge area of Russian empire and its insufficient exploration. In the same work he presented a self composed system of graphical symbols and also a proposition to measure the heights of the triangulation points from the sea level.

Because of the opposition of F. F. Shubert this proposition was accepted only in 1845.

After the joining of the measurements in Livland and Lithuania Tenner prepared for publication a thorough tract “Breitengradmessung in den Governments Vilna, Kurland, Grodno und Minsk ausgeführt in den Jahren 1816 bis 1834 von C.F.Tenner, General-Lieutenant im Generalstabe”. F.F. Shubert recommended to publish this work in the “Notes of the Depot of Military topography” but this journal was to come out only in 1837. In addition to that he did not allow to include the description of meridian measurements in this work. The feelings of Tenner are not difficult to guess and the work was never published. Tenner gave it as a present to Pulkovo observatory and Struve used the paper in his capital book “Arc du meridien ...” [24].

All the descriptions of his geodetic work and the results Tenner published in 10 papers of the “Notes” already mentioned.

Tenner died in Warsaw on December 28th, 1859 (new style) on his way back from Karlsbad where he had undergone the medical treatment.

Johann Jacob Baeyer

11. Tenner's sons

At getting acquainted with the Tenner's biography one could get an impression that he did not do anything beside his measurements and that he had no family life. In reality it was not so. Tenner was married with the daughter of General Savoiny and they had at least three sons - Jeremias, Nikolai and Eduard who all chose the career of a military man and became generals like their father [25]. The most known of the three was Lieutenant General Jeremias Tenner (1836-1903), who commanded a regiment in Russian-Turkish war and who received the golden sword (like his father) for showing valour at crossing the Balkan mountains. He became a warden of a monastery before his death and he is buried at the Novodevitshye cemetery in Moscow.

Nikolai Tenner was the commander of the 11th Fanagoria regiment of grenadiers at the end of XIX century and later the commander of the 2nd brigade of the 4th division.

The son of Eduard Tenner (1842-1899) Dmitri Tenner (1869 - ?) served after the graduating from the Nikolai Academy of the Military Headquarters in the central directorate of artillery in St Petersburg and reached the rank of Major General before the First World War. During the war Major General D. Tenner was the head of the 26th evacuation unit.

In 1958 in Lakewood (USA) the kadet of the Russian Marine Corps Grigori Ivanovitsh Tenner died, who could have well been Carl Friedrich Tenner's descendant.

So we may state half-jokingly that Struve founded a dynasty of astronomers and Tenner the dynasty of generals.

12. Summary

Under our eyes the life of a man who originated from a simple Estonian family rolled open. We may say that he was completely dedicated to his work. Thank to his natural intelligence and evidently to the diligence bequested from home he reached the absolute top of his métiere.

With his decades long work he laid a stable base for geodetic measurements in Russia for solving both the topographic and the fundamental scientific problems. There is no doubt that we may use the name of Carl Friedrich Tenner beside the name of Struve – another scientist connected with Estonia, when we are speaking about the giant undertaking – the measurement of Russian-Scandinavian meridian arc.

This thought is affirmed by Johann Jacob Baeyer, the partner of Bessel in joining the triangulation networks of Russia and Prussia, and the founder of International Association

of Geodesy who said about both of these great men: ”So the joining of science and practice has been done and Russia has reached such a place in higher geodesy which would have hardly been reached, it has substantially helped the development of science and the agents in geodesy, being constantly influenced by science did not remain at the old methods but under the masterful leadership of Tenner got acquainted with the new scientific results and took the practice to the same heights.” [26].

Acknowledgements

I am very grateful for the help in preparation of this article to Aili Bernotas from the Library of Tartu University, to Professor Emeritus Jüri Randjärv from the Estonian University of Life Sciences, to historian Mati Kröönström, to geodesist Andres Rüdja and to my colleague Jaan Pelt from Tartu Observatory.

References

1.http://whc.unesco.org/en/list/1187

2. Obituary, author captain Rotstein (?), Zapiski Voyenno-topograficheskago Depo, part XXIII, St Petersburg,1862.

3.Novokshanova, Z. Karl Ivanovitsh Tenner. Moskva, 1957.

4.Rootsmäe, L. C.F. Tenner oli eesti soost. Eesti Loodus, nr 3, 181, 1984.

5.Traat, A. Kas C.F. Tenner oli eesti päritolu? Eesti Loodus, nr 8, 513, 1983

6.Vassiljev L. C.F. Tenner, geodeet ja topograaf. Eesti Loodus, nr. 8, 509, 1983.

7.Vassiljev, L. 100 aastat kindral C. Tenneri surmast. Eesti Geograafia Seltsi aastaraamat 1959, Tallinn, 225, 1960.

8.Potter, H. Struve ja Tenner. Geodeet 31, 4, 2005.

9.Vuuk, A. Carl Friedrich Tenner. Tähetorni Kalender, 35, 85, 1959.

10.Ambur, O. Carl Friedrich Tenner – 210. Geodeet, 4, 1993.

11. http://www.nlr.ru/ar/staff/suhtelen.htm

12. http://mirimen.com/co_beo/SHubert-Fedor-Ivanovich-39AA.html

13. http://subdomainname.yurisnight.net/Messier/xtra/Bios/delisle.html

14. Bertram, Dr. (Schultz, G.J.). Wagien. Baltische Studien und Erinnerungen. Dorpat, [i]1868.

15. http://mirimen.com/co_beo/SHubert-Fedor-Fedorovich-39AB.html
16. http://mirslovarei.com/content_beo/SHubert-Fedor-Fedorovich-14385.html
17. http://www.pourlemerite.org/medals/crown.html
18. http://www.lgsp.petrobrigada.ru/index.html
19. http://people.clarkson.edu/~ekatz/scientists/ramsden_pdf.pdf
20. Viik, T. F.W. Bessel ja geodeesia. Geodeet,35, 74, 2007.
21. http://de.wikipedia.org/wiki/Hans_Karl_von_Diebitsch-Sabalkanski
22. Kaptüg, V.. The toise-metre problem in the Struve Arc. http://www.fig.net/pub/proceedings/prague-final-papers/Papers-acrobats/kaptjuk-fin.pdf
23. F. W. Bessel, *Über einen Fehler in der Berechnung der französischen Gradmessung und seiner Einfluss auf die Bestimmung der Figur der Erde*, Astronomische Nachrichten, Bd. 19, N. 438, S. 97, 1841.
24. Struve, F.G.W. Arc du meridien de 25° 20' entre le Danube et la Mer Glaciale. St.Petersbourg, 1860.
25. Kröönström, M. Eestlastest ohvitserid Vene armees. Akadeemia, nr 4, 808, 2006.
26. Baeyer, J.J.: O vide I velichine Zemli. Zapiski Vojenno-topograficheskoi tshasti, tshast XXVI, 1865.

The triangulation made under the leadership of C.F. Tenner (1816-1851)

Site of measurements (beginning and end)	I class			II and III class	
	Number of triangles	Probablr error of the angle	Number of reference marks	Number of triangles	Number of reference marks
Vilno (1816-1821)	119	0”.62	100	3020	1225
Kurland (1822-1824)	42	0”.35	42	740	375
Grodno (1825-1829)	34	0”.40	34	1059	554
Minsk (1830-1839)	56	0”.73	57	439	215
Volynia and Podolia (1836-1840)	100	0”.49	97	1416	544
Kiev (1840-1846)	78	0”.41	75	1432	175
Belostok (1843-1850)	23	0”.47	24	342	182
Bessarabia (1846-1850)	61	0”.36	58	631	286
Poland (1845-1851)	219	0”.50	-	2112	-
Together	**731**	**Mean 0”.49**		**11191**	

Joining the triangulation networks of Russia and Prussia and Russia and Austria under the leaderhip of C.F. Tenner

Sites of joining	Sum of sides of neighbouring triangles in toises		Difference in toises	Relative differences
	Russia	**Austria**		
Tarnograd	28442.139	28441.979	-0.160	-1:178000
Krakov	77338.483	77338.795	+0.312	+1:248000
	Russia	**Prussia**		
Memel	16865.876	16865.9496	-0.0736	-1:200000
Tarnovitsy	67279.162	67279.391	+0.229	+1:293000
Toruṇ	88698.833	88698.345	-0.488	-1:182000
Augustow	36977.411	36975.789	-1.622	-1:23000

The triangles in the row Warsaw-Augustow were measured with lower accuracy since this work was meant only for topographic purposes. Besides of that the time span between the joining measurements was close to 7 years.

The baselines measured under the direction of C.F. Tenner

Baseline	Length (m)	Time of measurement	Number of working days	Mean number of rods per hour	Mean temp. (R)	Mean inclination of rods	Responsible person
Drisvjata, Vilno	11536.70	02-03.1817	30	16.3	-0.2	1^0 29'	Tenner
Ponedelski, Vilno	11802.29	09-10.1820	23	16.2	8.4	1^0 06'	Tenner
Polangen, Vilno	9885.29	08-09.1821	15	19.1	+13.2	0^0 34”	Tenner
Ossovnitsa	11148.32	09.1827	13	22.6	10.09	0^0 37”.4	Tenner
Staro-Konstatinovka, Volynia	8893.90	08-09.1838	20	17.89	12.68	Mean – some minutes and for 20 rods ca 2^0	Tenner
Belaja Tserkov, Kiev	6207.18	08.-09.1843	9	22.14	12.895	1298 rodsi $<1^0$, 152 rods between 1^0 and 2^0	Tenner
Varssavi, Poola	5782.54	08-09.1846	12	16.9	13.9	1^0 40'	Tenner
Tarnograd, Poola	5381.07	08-09.1847	14	16.3	13.7	1^0 40'	Tenner
Częstochowa, Poola	4367.55	08.1848	13	13.6	13.6	1^0 30'	Tenner
Częstochowa, Poland	-	08-09.1848	12	18.4	13.7	1^0 3'	Tenner
Romankautsi, Bessarabia	5672.00	08-09.1848	11	-	Ca 13	-	Struve
Iizmail, Bessarabia	5399.65	03-04.1849	21	-	12.995	-	Struve--Tenner

[i] This paper is a translation of the similar text in Estonian published in the official journal of the Estonian Society of Geodesists - GEODEET, vol. 36 (60), p. 50 – 59, 2008.